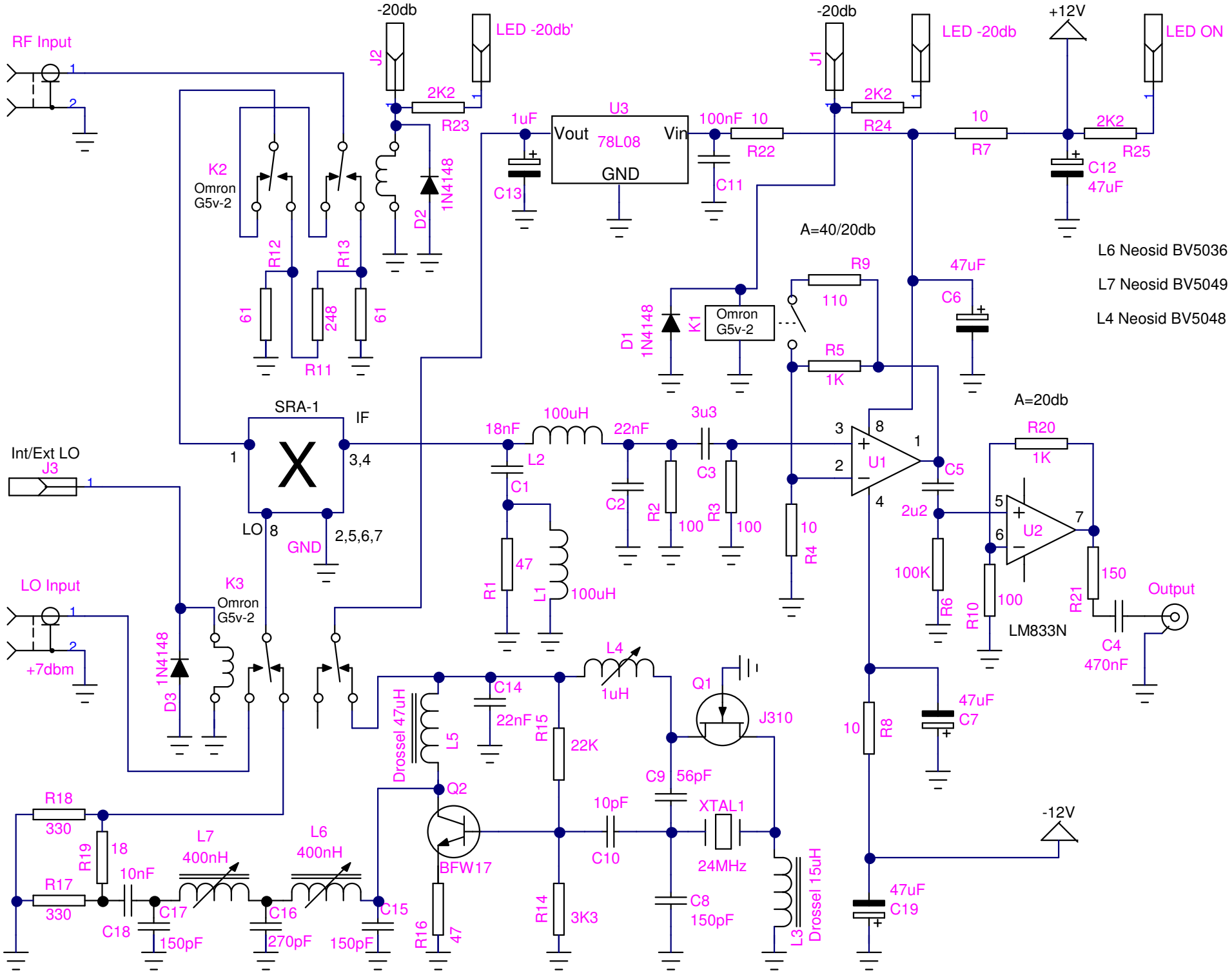
RF Input
-20db
J2
LED -20db'
2K2
R23
1uF
U3
Vout
78L08
Vin
GND
100nF
10
R22
C13
C11
-20db
J1
LED -20db
2K2
R24
10
R7
+12V
LED ON
2K2
R25
C12
47uF
K2
Omron
G5v-2
D2
1N4148
R12
R13
61
248
61
R11
A=40/20db
R9
110
47uF
C6
D1
1N4148
K1
Omron
G5v-2
R5
1K
L6 Neosid BV5036
L7 Neosid BV5049
L4 Neosid BV5048
SRA-1
IF
X
1
3,4
LO
8
GND
2,5,6,7
Int/Ext LO
J3
18nF
100uH
22nF
3u3
L2
C1
C2
R2
100
C3
R3
100
10
R4
3
8
1
2
U1
4
C5
2u2
A=20db
R20
1K
5
6
U2
7
100K
R6
R10
100
LM833N
R21
150
Output
C4
470nF
R1
47
L1
100uH
LO Input
+7dbm
K3
Omron
G5v-2
D3
1N4148
L4
1uH
Q1
J310
C14
22nF
Drossel 47uH
L5
R15
22K
10
R8
47uF
C7
C9
56pF
Q2
10pF
XTAL1
-12V
R18
330
R19
18
L7
400nH
L6
400nH
BFW17
C10
24MHz
R17
330
10nF
C17
C16
C15
C18
150pF
270pF
150pF
R16
47
R14
3K3
C8
150pF
L3
Drossel 15uH
47uF
C19